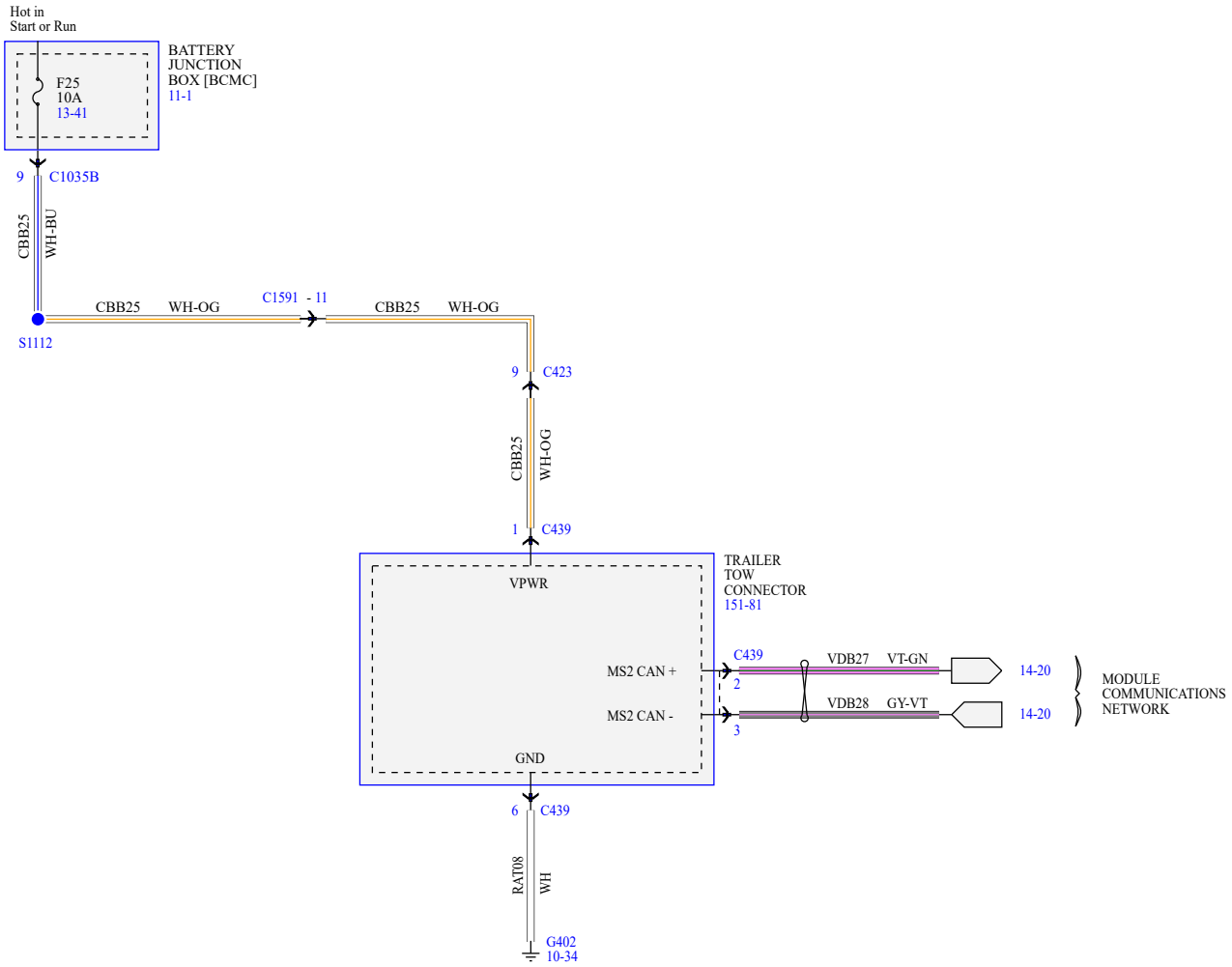TRAILER TPMS / TRAILER CAMPER PREP PACKAGE 1